THIS DRAWING IS UNPUBLISHED. RELEASED FOR PUBLICATION -,- .
© COPYRIGHT - BY TYCO ELECTRONICS CORPORATION. ALL RIGHTS RESERVED.

LOC	DIST
DF	FO

REVISIONS

P	LTR	DESCRIPTION	DATE	DWN	APVD
	E	REV PER ECO 05-013561	07DEC05	VF	CT

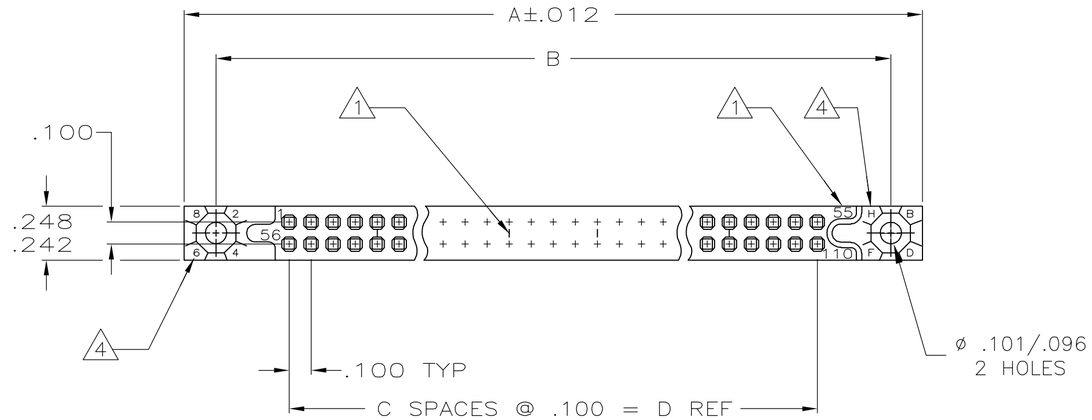

1. CAVITY IDENT NUMBERS (PER TABLE) AND LINES INDICATING EVERY FIVE CAVITIES INK STAMPED WHITE ON MATING FACE.
2. CONNECTOR MEETS ALL APPLICABLE REQUIREMENTS OF MIL-C-55302.
3. NUMBERS INDICATING EVERY FIVE CAVITIES INK STAMPED WHITE ON SIDE.
4. KEY POSITION IDENTIFICATIONS MOLDED ON SURFACES SHOWN.
5. FINISH: PLATED GOLD .000050 THK IN CONTACT AREA WITH A POINT OF PLATING THICKNESS MEASUREMENT .135 FROM MATING END OF CONTACT,ALL OVER NICKEL .000030 THK. CONTACT LEADS DIPPED WITH 63/37 TIN-LEAD PER MIL-STD-202 METHOD 208.
6. EPOXY SEALANT ADDED TO BOTTOM OF HOUSING.
7. MAX DEPTH OF CONTACT POINT.
8. AMP, AMP PART NUMBER, AND DATE CODE INK STAMPED WHITE.

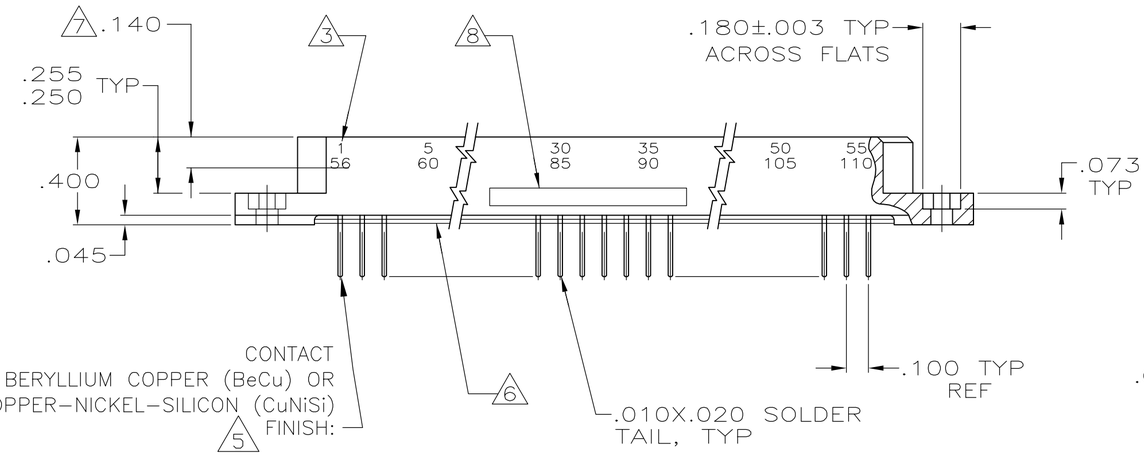

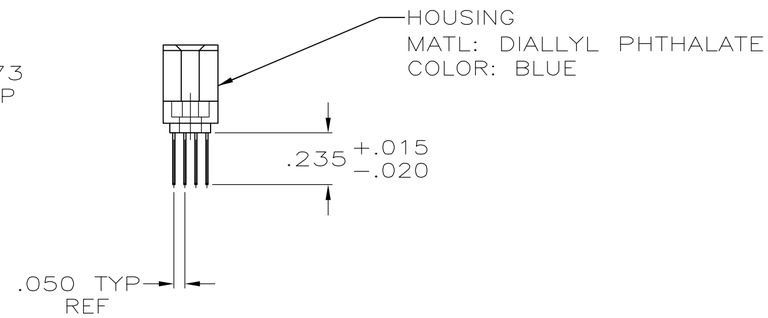

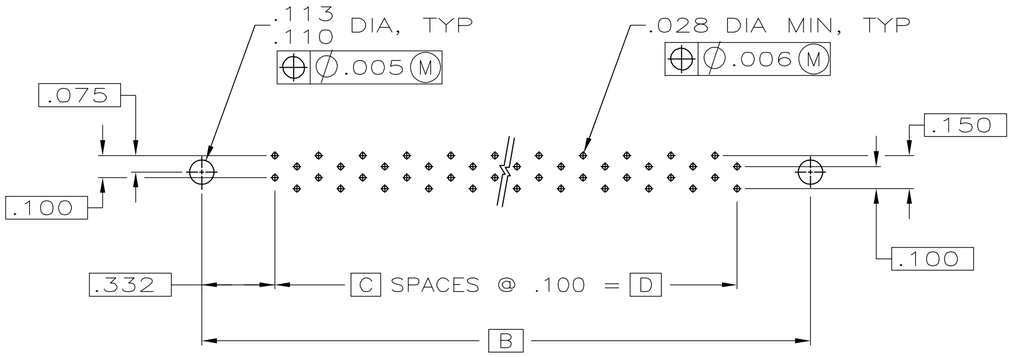

RECOMMENDED P.C. BOARD LAYOUT
(CONNECTOR SIDE)

	CAVITY IDENT 1	D	C	B	A	NO OF POSN	PART NUMBER
	1 70 / 71 140	6.900	69	7.565	7.855	140	1-534650-3
	1 67 / 68 134	6.600	66	7.265	7.555	134	1-534650-2
	1 65 / 66 130	6.400	64	7.065	7.355	130	1-534650-1
	1 60 / 61 120	5.900	59	6.565	6.855	120	1-534650-0
	1 55 / 56 110	5.400	54	6.065	6.355	110	534650-9
OBSOLETE	1 50 / 51 100	4.900	49	5.565	5.855	100	534650-8
OBSOLETE	1 45 / 46 90	4.400	44	5.065	5.355	90	534650-7
OBSOLETE	1 40 / 41 80	3.900	39	4.565	4.855	80	534650-6
OBSOLETE	1 35 / 36 70	3.400	34	4.065	4.355	70	534650-5
OBSOLETE	1 30 / 31 60	2.900	29	3.565	3.855	60	534650-4
OBSOLETE	1 25 / 26 50	2.400	24	3.065	3.355	50	534650-3
	1 20 / 21 40	1.900	19	2.565	2.855	40	534650-2
OBSOLETE	1 15 / 16 30	1.400	14	2.065	2.355	30	534650-1

DIMENSIONS

THIS DRAWING IS A CONTROLLED DOCUMENT.

DIMENSIONS: INCHES

TOLERANCES UNLESS OTHERWISE SPECIFIED:
0 PLC ± -
1 PLC ± -
2 PLC ± -
3 PLC ± .005
4 PLC ± -
ANGLES ± -

MATERIAL: SEE CALLOUTS
FINISH: SEE CALLOUTS

DWN Brent D. Yohn 1-27-88
CHK James P. Scholz 1-27-88
APVD James P. Scholtz 1-27-88
PRODUCT SPEC —
APPLICATION SPEC —
WEIGHT —

tyco Electronics
Tyco Electronics Corporation
Harrisburg, PA 17105-3608

NAME
RECEPTACLE ASSEMBLY,
1000 SERIES BOX, SEALED,
.010 X.020 POSTED CONTACTS, EXTERNAL KEYING

SIZE	CAGE CODE	DRAWING NO	RESTRICTED TO
A2	00779	C-534650	—

CUSTOMER DRAWING | SCALE 2:1 | SHEET 1 OF 1 | REV E